CHARACTERISTICS

Pump pressure:
- 35 bar (507 psi)

Flow rate:
- 6,0 – 17,0 litre/min

Range of viscosity:
- From 20 to 750 mm²/s

IDEAL FOR

- Pumping of hydraulic oil

APPLICATIONS

- Oil circulation systems
- Hydraulic fluid units

GPU3

Gear pumps from 6 to 17 litres flow rate and also a maximum pumping pressure of 35 bar (507 psi).
This pump is designed for base mount.

General

Type	Base mount
Ambient temperature	From 32 to 176°F (from 0 to 80 °C)
Protection class as per EN60529	IP 44

Hydraulic system

Operating pressure	35 bar (507 psi)
Flow rate	6,0 – 17,0 l/min
Operating medium	Mineral oil
Range of viscosity	From 20 to 750 mm²/s

Drive

Type of drive	Electrical
Supply voltage	3~ 400V
Frequency	50 Hz
Connection	Terminal board

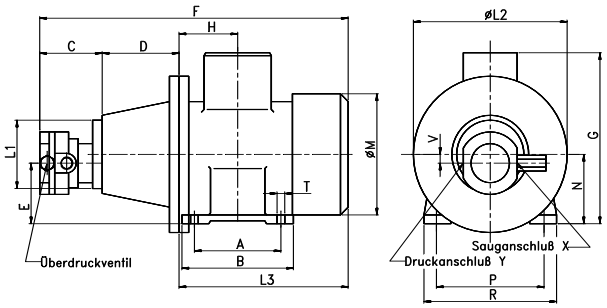

Ordering information

Flow rate [l/min]	Engine output [KW]	Dimensions [mm]										Order number
		A	B	C	D	E	F	G	H	L1	L2	
		L3	M	N	P	R	T	V	X	Y		
6	0,55	100	125	85	100	67	394	192	67	100	200	P30014762
		209	139	80	125	168	10	13	3/8“	3/8“		
9	0,75	100	125	85	100	67	394	192	67	100	200	P30014763
		209	139	80	125	168	10	13	3/8“	3/8“		
13	1,1	100	130	100	100	75	426	210	70	120	200	P30014764
		226	157	90	140	178	10	15	1/2“	1/2“		
17	1,5	125	155	100	100	75	448	210	70	120	200	P30014765
		248	157	90	140	178	10	15	1/2“	1/2“		

DropsABielomatikSchmiertechnikGmbH products can be purchased at DropsABielomatikSchmiertechnik GmbH branches and authorised distributors.
Write to info@bielomatik-lubrication.de

Distributor Info:

www.bielomatik-lubrication.de
www.dropsa.com